Owners Manual

PD750A

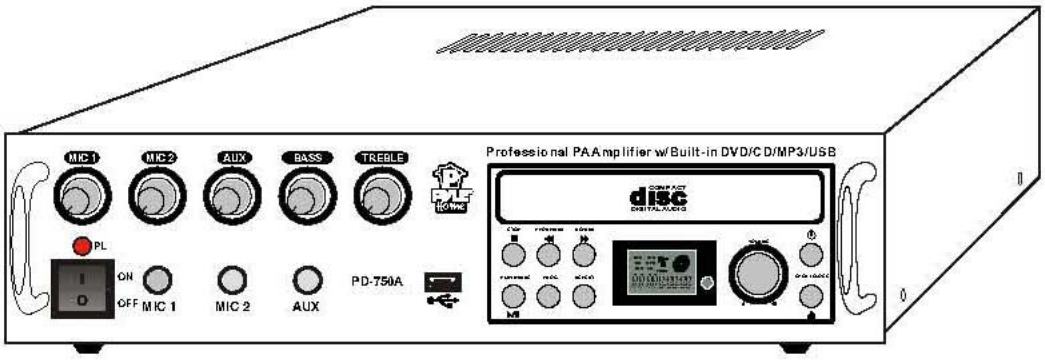

Professional PA Amplifier w/ Built in DVD/CD/MP3/USB & 70v Output

www.pyleaudio.com

Thank you for choosing Pyle products This attractive unit will give you many years of listening pleasure.

Please read the installation and operation instructions in this manual. and keep it for reference.

SPECIFICATIONS

PD750A

- Professional PA Amplifier
- With USB port, DVD player(Anti-shock)
- Compatibility with DVD,CD, CD-R,CD-RW,MP3
- Output regulation:Less than 2db no load to full load
- Speaker output: 4Ω(20V) 8Ω(28.3V) 16Ω(40V)
- 70V, 100V. line out:1V+/-0.3V
- Frequency Response:20Hz20KHz
- Harmonic distortion:1%
- S/N rotie:<75db
- Peak Power:700 WATTS
- 2 Mic input with volume control
- 1 AUX input with volume control
- DVD/AUX volume control
- Tone control Bass:+/-10db at 100Hz Treble:+/-10db at 10KHz
- Indicator: LED output level meter
- AC power supply 110-127/220-240 AC 50/60Hz
- DC power supply:12V battery
- Dimension of Unit:15.75" x 12.20" x 3.94"

FRONT PANEL

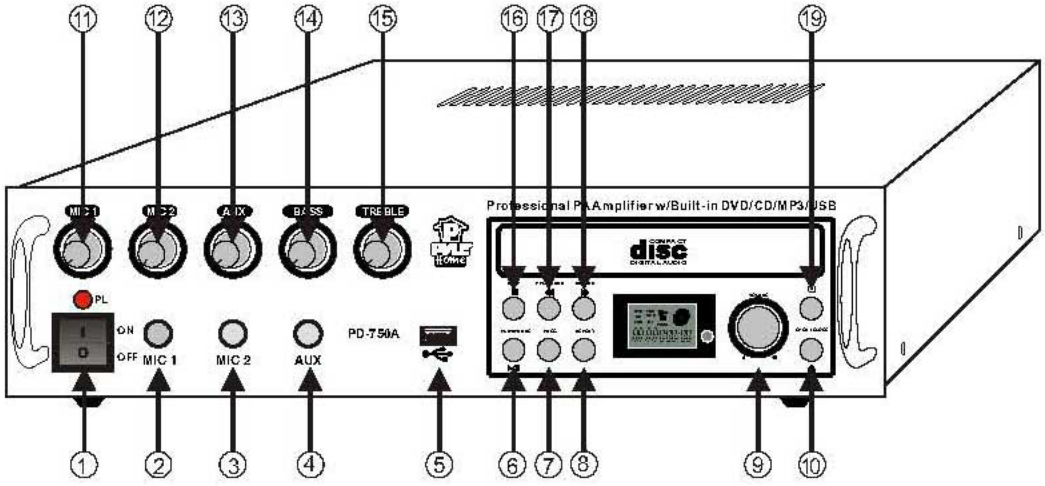

1. Power Switch
2. MIC-1 Phone Jack
3. MIC-2 Phone Jack
4. AUX IN Phone Jack
5. USB Port
6. Play/pause Button
7. Menu
8. Replay
9. Volume Control
10. Open/close Button
11. MIC 1 Volume Control
12. MIC 2 Volume Control
13. AUX Volume Control
14. BASS Volume Control
15. TREBLE Volume Control
16. STOP Button
17. Backward Button
18. Forward Button
19. DVD Power Switch

REAR PANEL

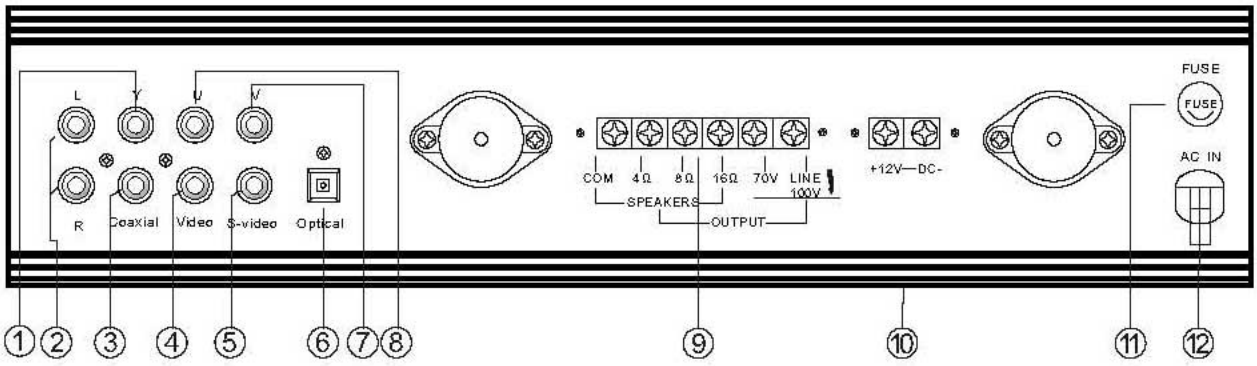

DVD/CD OUTPUT SECTION

1. RCA jack, Y component output
2. RCA jack, Left/Right Audio output, connect to external amplifier
3. coaxial output, connect to TV
4. RCA jack, Video output, connect to TV
5. S-Video jack, connect to TV
6. The fiber optical output, connect to TV
7. RCA jack, V component output
8. RCA jack, U component output
9. SPEAKER output, low & high impedance
10. Voltage selector: 110V 60Hz/220V 50Hz (under the bottom)
11. FUSE.
12. AC INPUT.

EXAMPLE OF POSSIBLE CONNECTIONS

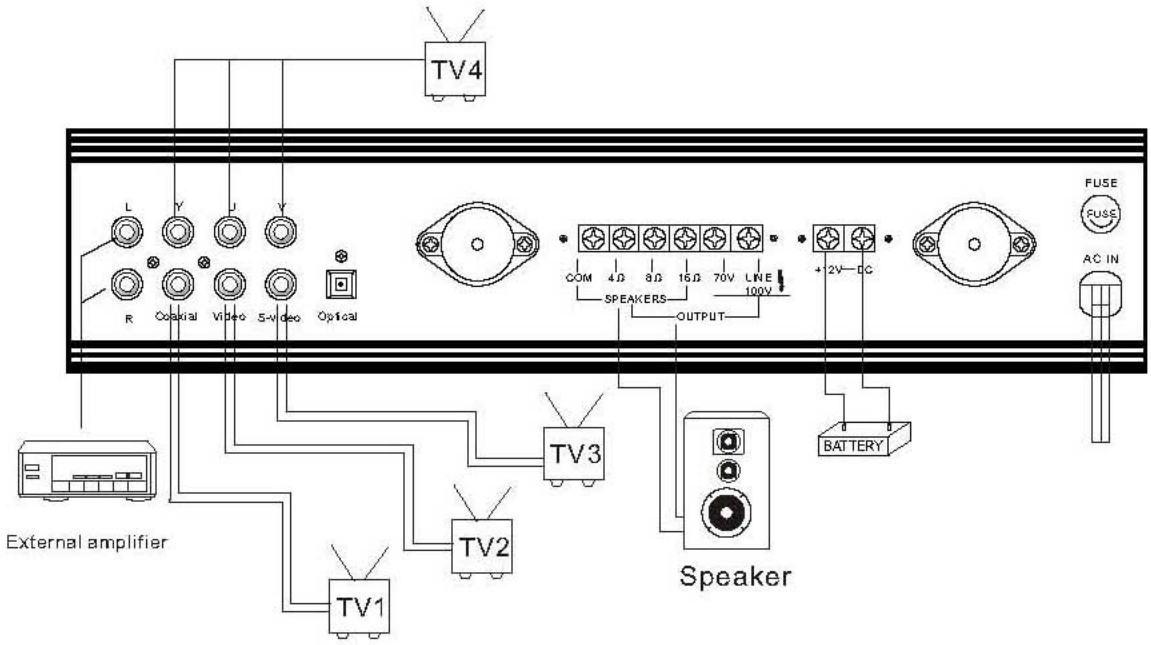

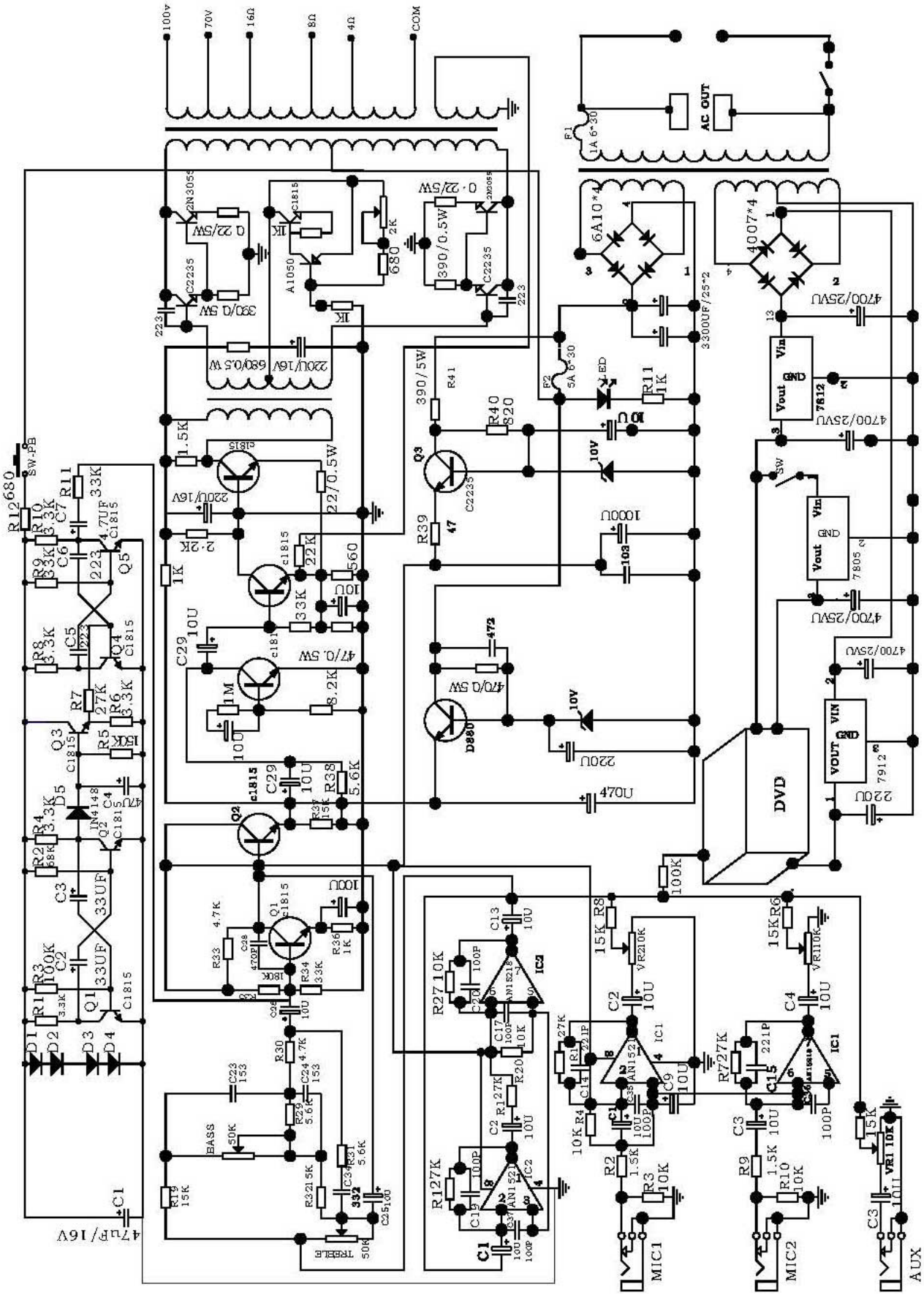
100v
70V
16Ω
8Ω
4Ω
COM
AC OUT
F1
1A 6*30
6A10*4
4007*4
3300UF/25*2
F2
5A 6*30
ED
R11
1K
R40
820
R41
390/5W
Q3
C2235
R39
47
10V
1000U
103
472
470/0.5W
D880
220U
470U
4700/25VU
Vin
Vout
GND
7812
7805
7912
VOUT
VIN
SW
DVD
100K
R12
680
SW-PB
R10
3.3K
C7
R11
33K
4.7UF
C1815
R9
33K
C6
223
Q5
R8
3.3K
C5
Q4
R7
27K
R6
3.3K
Q3
R5
150K
D5
IN4148
C4
47U
R4
3.3K
Q2
R2
68K
C3
33UF
R3
100K
C2
33UF
R1
3.3K
Q1
D1
D2
D3
D4
C1
47uF/16V
1.5K
220U/16V
22/0.5W
2.2K
1K
22K
560
10U
33K
C29
10U
47/0.5W
1M
8.2K
10U
C29
10U
R38
5.6K
R37
15K
Q2
Q1
R33
4.7K
R36
1K
R34
33K
100U
R30
4.7K
C23
153
C24
153
R29
5.6K
BASS
50K
R31
5.6K
R32
15K
332
C25
100
TREBLE
50K
R19
15K
C13
10U
R27
10K
IC2
C17
100P
10K
R20
R127K
C2
10U
R127K
C19
100P
C1
100P
R8
15K
VR2
10K
C2
10U
IC1
R1
27K
221P
C14
C9
10U
R4
10K
R2
1.5K
R3
10K
MIC1
R6
15K
VR1
10K
C4
10U
R7
27K
221P
C15
C3
10U
R9
1.5K
R10
10K
MIC2
15K
VR1
10K
C3
10U
AUX